NEED	○	PURCHASING SPECIFICATION	REQUEST FOR APPROVAL	DELIVERY DRAWING	INSPECTING STANDARD	QC-PROCESS

FIGURE DIMENSION | GT.CODE | ○ AND ⌭:RADIAL | 3RD ANGLE PROJECTION

CAREER

Rev.1(2003.Apr.18)
Change Int.Manifold and Generator.

Rev.2(2003.Sep.11)
Change parts
·C.W. Drain Plug
·Generator
·Adjuster
(YDSTE-03390)

Rev.3(2003.Dec.03)
Add to 3TNV82A-GJGE
(YDSTE-03596)

Rev.4(2004.Feb.5)
Change Exh.Manifold
(YDSTX-04014)

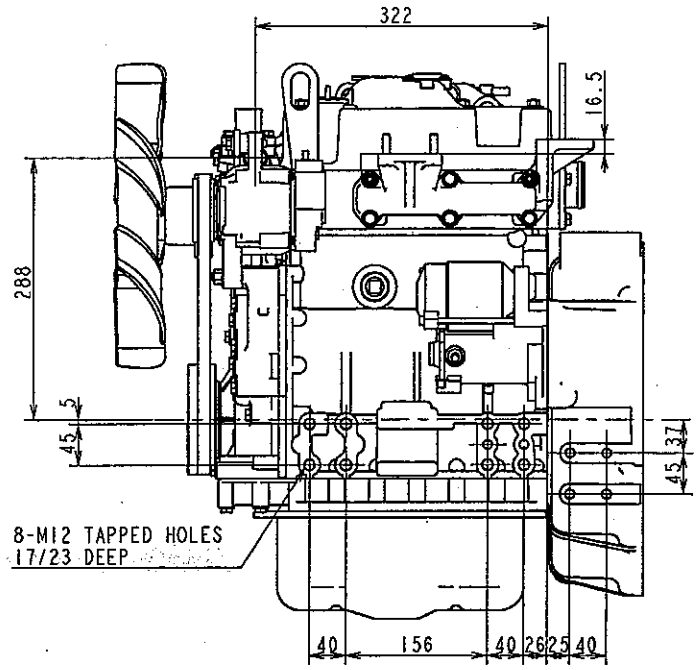

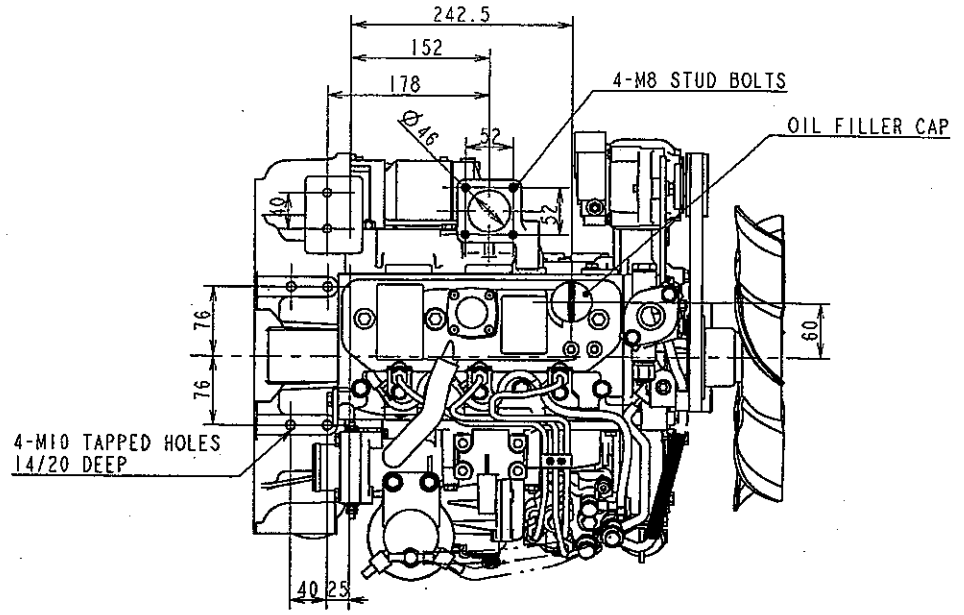

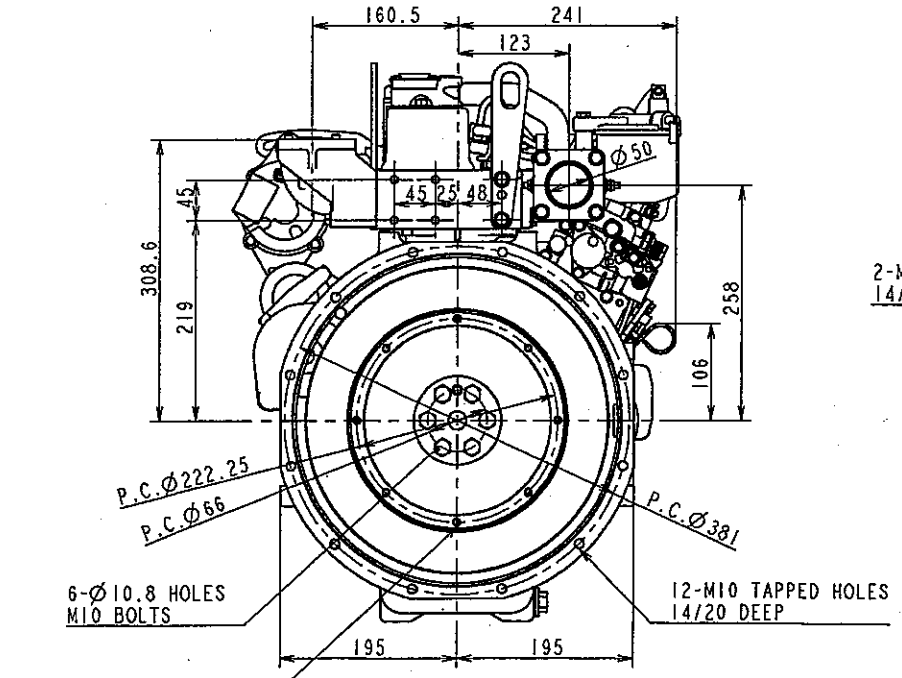

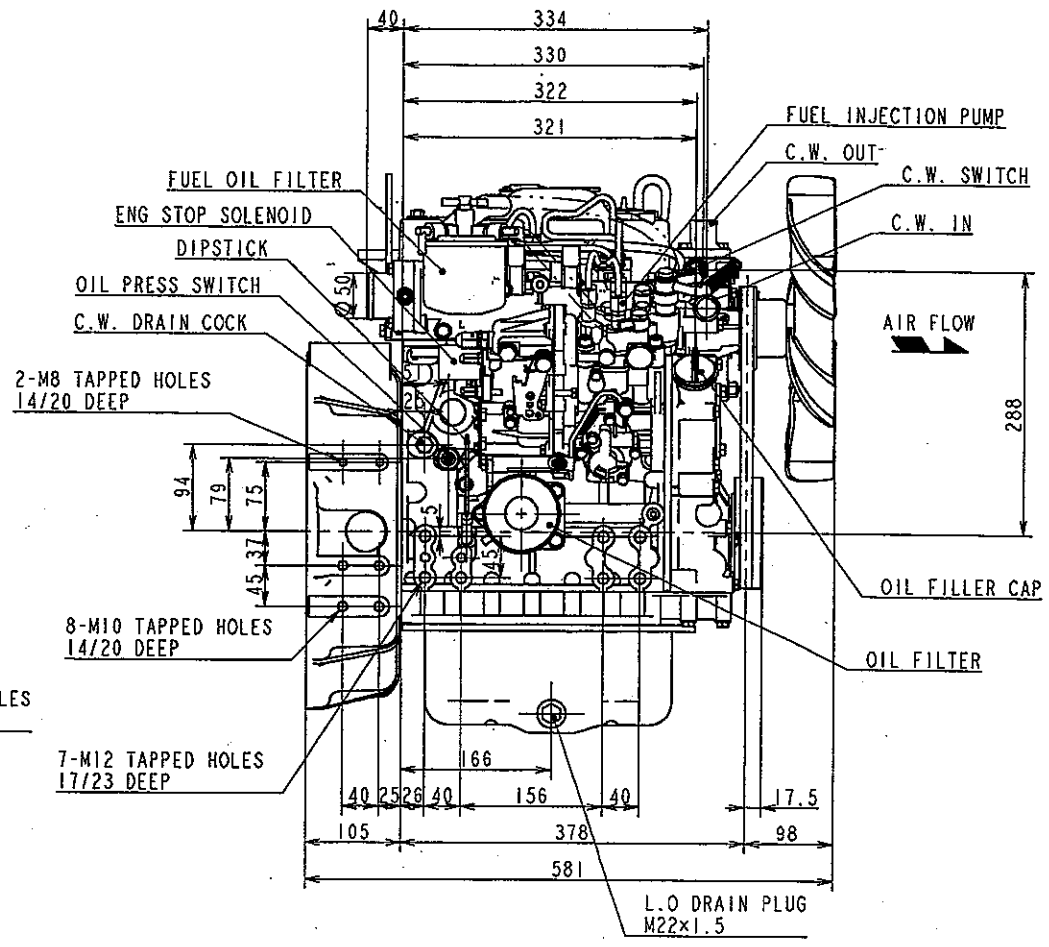

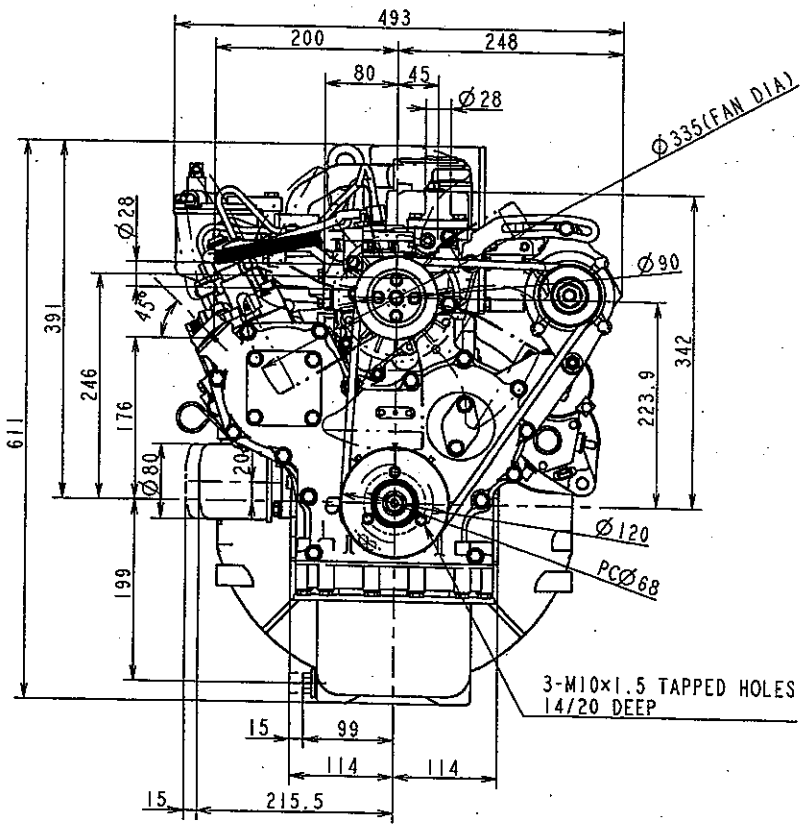

3D-CAD

NOTICE

FORM	LOCATION	RUN-OUT
GEOMETRICAL TOLERANCE		
KIND OF TOLERANCE		SYMBOL
STRAIGHTNESS TOLERANCE		—
CIRCULARITY TOLERANCE		○
PROFILE OF LINE TOLERANCE		⌒
FLATNESS TOLERANCE		▱
CYLINDRICITY TOLERANCE		⌭
PARALLELISM TOLERANCE		//
PERPENDICULARITY TOLERANCE		⊥
ANGULARITY TOLERANCE		∠
POSITIONAL TOLERANCE		⌖
COAXIALITY OR CONCENTRICITY TOLERANCE		◎
SYMMETRY TOLERANCE		⌯
CIRCULAR RUN-OUT TOLERANCE		↗
TOTAL RUN-OUT TOLERANCE		⌰

WEIGHT (RAW)	kg (±)						G.MANAGER	MANAGER	
WEIGHT (CALC.)	0.000kg (±)								
	SEC.MANAGER 山田	MODEL	3TNV 82A-GGE	3TNV 82A-GJGE			SCALE	1:4	
CHECKED	SPECIALIST	QTY	1	1			MATERIAL		
DESIGNED	DRAWN 福岡	DATE:Y.M.D 2002.9.11	NAME	OUTLINE					

YANMAR

YANMAR CO.,LTD. ENGINE PRODUCT OPERATIONS DIV.

CODE	Rev.1	Rev.2	Rev.3	Rev.4	DRAW SIZE
B3-19946-0010					A1

要	○		購買仕様書				検査基準書		品質管理工程図		特別管理部品		量産初期安定管理部品

三　角　法
3RD ANGLE PROJECTION

形状寸法コード　　G.T.CODE

真円度・円筒度ハ、半径法

MARK	COLOR
B	Black
W	White
R	Red
L	Blue
G	Green
Y	Yellow
Br	Brown
Lg	Light Green
Sb	Sky blue
O	Orange
P	Pink
Gr	Gray
R/W	Red/White

	B	R1	R2	ACC	C	BR
PRE-HEATING	○	○		○		
OFF	○					
ON	○			○		○
START	○		○	○	○	○

KEY SW. DIAGRAM

TABLE 1

STARTER	STARTER S TERMINAL CONNECTOR
DC12V-1.2kW 129129-77010	YAZAKI 7116-3060(TARMINAL) 7123-3215-60(TERMINAL HOUSING)
DC12V-1.4kW 129407-77010	
DC12V-1.7kW 129242-77010	YAZAKI 7116-2033(TARMINAL) 7123-2010(TERMINAL HOUSING) or AMP 170234(TERMINAL) 171809-2(TERMINAL HOUSING)
DC12V-2.3kW 129136-77011	LA204

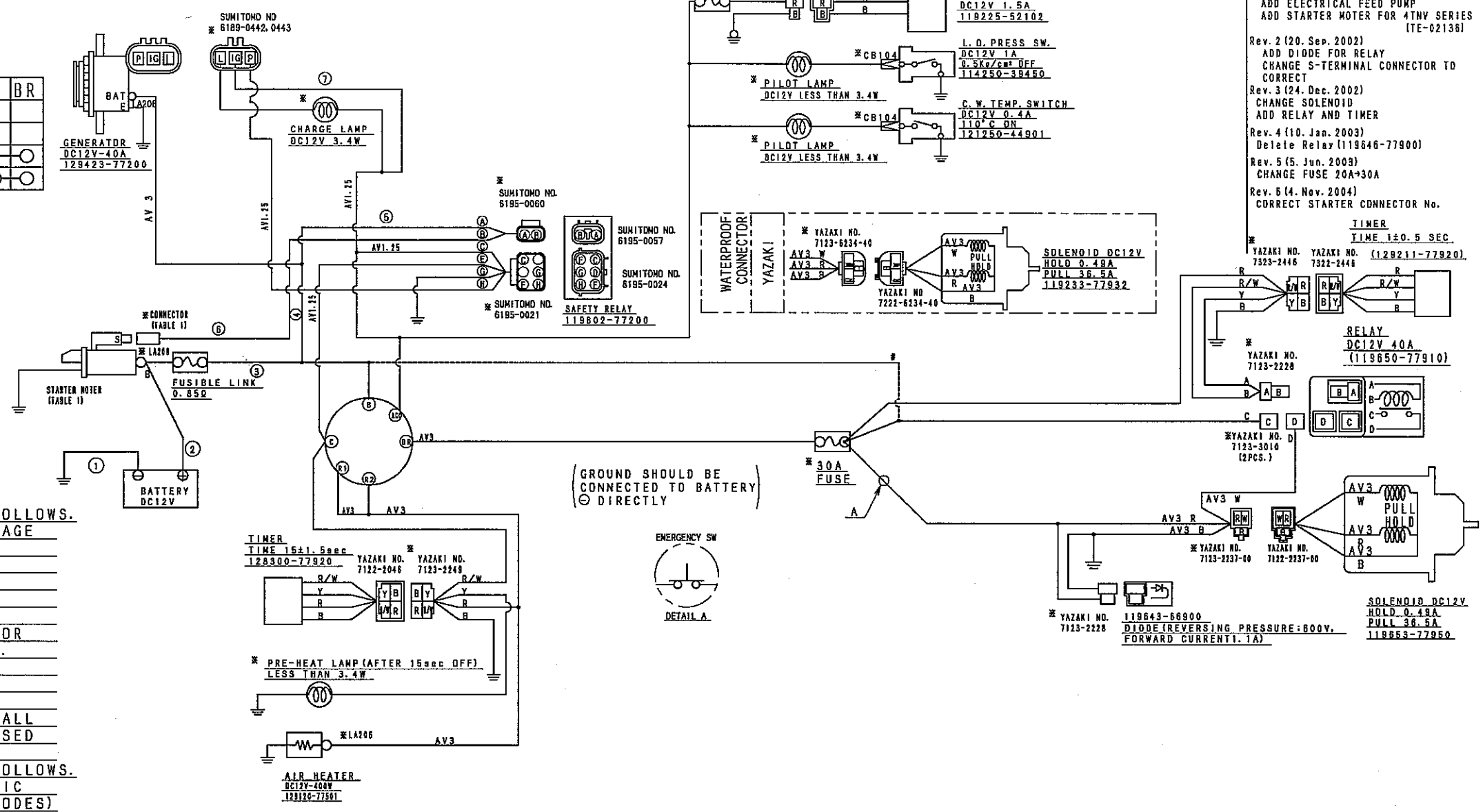

NOTES

1. WIRING OF STARTER MUST BE OBSERVED AS FOLLOWS. OTHERWISE IT CAUSES MISS STARTING OR DAMAGE OF STARTERMOTOR.
1-1. TOTAL ELECTRIC RESISTANCE OF BATTERY CABLE ①+② SHOULD BE LESS THAN 2/10000Q.
REFERENCE: AV15:≦1.4m, AV20:≦2.2m
AV30:≦3.8m, AV40:≦4.6m
1-2. TOTAL ELECTRIC RESISTANCE OF WIRING FOR STARTER ③-⑥ SHOULD BE LESS THAN 5/100Q.
REFERENCE OF TERMINAL RESISTANCE
: 15/10000Q PER COUPLER
00Q PER SCREW SETTIG
1-3. BATTERY EARTH CABLE ① CONNECTION SHALL BE ENSURED. PAINTED SURFACE MAY NOT BE USED (FOR EARTHING) AVOIDING THE MISS CONTACT.
2. BATTERY TREATMENT MUST BE OBSERVED AS FOLLOWS. OTHERWISE IT MAY CAUSE BURNING OF ELECTRIC EQUIPMENTS OR COMPONENTS. ALTERNATOR (DIODES) BURNING CAUSED BY BATTERY CABLE CONNECTION REVERSELY IS NOT WARRANTED.
2-1. BATTERY SHOULD BE FIXED BY FITTING. (NOT TO MOVE)
2-2. BATTERY CABLE LENGTH SHOULD BE ADJUSTED PROPERLY AND CLAMPED NOT TO BE CONNECTED REVERSELY.
2-3. NOT LOOSE THE BATTERY CABLE TERMINAL, NOR TURN THE BATTERY SWITCH OFF DURING THE ENGINE RUNNING.
3. ONLY THE SPECIFIED LOAD SHOULD BE APPLIED ON THE ALTERNATOR 'L' AND 'P' LINE. IT IS NOT ALLOWED TO CONNECT ANY LOAD UNSPECIFIED WITHOUT YANMAR APPROVAL.
4. CHECK ANY SURGE CURRENT OR VOLTAGE OCCURED UNDER NORMAL OPERATIONS AND EXPECTIVE ERRONEOUS OPERATIONS, AND CONFIRM THE CIRCUIT NO SURGE OCCURS. ESPECIALLY PROVIDE THE FLYWHEEL DIODE FOR 'C-LOAD' AND DIODE FOR 'L-LOAD'.

REMARKS

1. ※ MARKED PARTS ARE NOT PROVIDED BY YANMAR.

NOTES FOR ENGINE STOP SOLENOID

1. PERMISSIBLE RESISTANCE OF SOLENOID CIRCUIT SHOULD BE LESS THAN 0.07Q TO GUARANTEE PERMISSIBLE LOWEST VOLTAGE 9V TO WORK SOLENOID(PULL COIL). (TERMINAL RESISTANCE :15/10000Q PER COUPLER. 00 PER SCREW SETTING. COUPLER RESISTANCE OF SOLENOID DOESN'T NEED TO BE COUNTED)
REFERENCE :AV2(0.00880/m):≦8.0m···WITHOUT TERMINAL RESISTANCE
AV3(0.00560/m):≦12.5m···SAME AS ABOVE
WHEN YOU EXCEED PERMISSIBLE RESISTANCE, ADOPT THE CIRCUIT IMPRESSED FROM THE POWER SUPPLY TO THE SOLENOID DIRECTLY USING A RELAY ···REFER TO #
2. HIGH TEMPERATURE PARTS, SUCH AS AN EXHAUST PIPE, SHOULD NOT APPROACH FOR THE PULL POWER FALL OF SOLENOID, AND HEATING PREVENTION OF INNER COIL TEMPERATURE. (PERMISSIBLE AMBIENT TEMPERATURE:-30~100℃)
3. INSTALL FUSE TO PROTECT THE HARNESS AGAINST TROUBLES SUCH AS SHORT CIRCUIT OR CONTINUOUS DRIVE OF PULL-COIL.
4. THE POWER SUPPLY OF SOLENOID MAY NOT BE COMMON WITH THE LINE OF ALTERNATOR INITIAL EXCITATOR AS SHOWN IN THIS DRAWING. (OTHERWISE, SOLENOID MAY LOOSE STOP FUNCTION DUE TO THE POWER SUPPLY FROM ALTERNATOR 'L' TERMINAL.)
5. IN CASE OF WATERPROOF CONNECT OR APPLICATION, CONNECTOR SHOULD BE FIXED BY FITTING TO PREVENT LEAD WIRE BREAK.
6. IN CASE OF EMARGENCY STOP OF MACHINE FOR SAFETY WILL BE APPLIED, SWITCH LOCATION SHOULD BE SHOWN AS A.
7. IN CASE OF THE SOLENOID CIRCUIT RESISTANCE WOULD BE LIMIT. # WIRING IS APPLICABLE.

図　面　来　歴
CAREER

Rev. 1 (30May. 2002)
CHANGE THE NOTES FOR ENGINE STOP SOLENOID
ADD ELECTRICAL FEED PUMP
ADD STARTER MOTER FOR 4TNV SERIES (TE-02136)
Rev. 2 (20. Sep. 2002)
ADD DIODE FOR RELAY
CHANGE S-TERMINAL CONNECTOR TO CORRECT
Rev. 3 (24. Dec. 2002)
CHANGE SOLENOID
ADD RELAY AND TIMER
Rev. 4 (10. Jan. 2003)
Delete Relay (119646-77900)
Rev. 5 (5. Jun. 2003)
CHANGE FUSE 20A→30A
Rev. 6 (4. Nov. 2004)
CORRECT STARTER CONNECTOR No.

素材質量 WEIGHT(RAW)		(±　%)
完成質量 WEIGHT(精度%)		(±　%)
主席	長 SEC. MANAGER	
検図 CHECKED	機能担当者 SPECIALIST	
設計 DESIGNED	製図 DRAWN	年月日 DATE
K. Yokoi	S. Shimizu	2002. 1. 29

水圧試験 HYDRAULIC TEST	MPa (kg/cm²)
空圧試験 PNEUMATIC TEST	MPa (kg/cm²)

小形工開発部	部長 G. MANAGER	技部長 MANAGER
		J. Nishida

機種 MODEL	3TN V84 (T)	3TN V82A	3TN V88	4TN V84 (T)	4TN V88
個数 QTY.					

尺度 SCALE: SCALE OUT
材質 MATERIAL:

名称 NAME: ケッセンス゛ WIRING DIAGRAM
WIRING DIAGRAM

YANMAR CO., LTD.
ENGINE PRODUCT OPERATIONS DIV.

Rev. 2 | Rev. 3 | Rev. 4 | Rev. 5 | Rev. 6
コード CODE: E3-29004-0050
図面サイズ: A2 (C)

表面ノ種類ト記号		
形状公差	真直度	—
	真円度	○
	線　形	⌒
	平面度	□
	円筒度	⌭
	面　形	⌓
姿勢公差	平行度	//
	直角度	⊥
	傾斜度	∠
位置公差	位置度	⌖
	同軸度	◎
	対称度	⌯
振れ公差	円周振れ	↗
	全振れ公差	⌰

A　B　C　D　E

要	○	購買仕様書			検査基準書	品質管理工程図	特別管理部品	量産初期安定管理部品

普通許容差 長サ (mm)						普通許容差 角度		
1以上	4以下	±0.1	250ヲコエ	1000以下	±0.8		10以下	±1度
4ヲコエ	16以下	±0.2	1000ヲコエ	2000以下	±1.2	10ヲコエ	50以下	±30'
16ヲコエ	63以下	±0.3	2000ヲコエ	4000以下	±2.0	50ヲコエ	120以下	±20'
63ヲコエ	250以下	±0.5				120ヲコエルモノ		±10'

形状寸法コード G.T.CODE M

真円度・円筒度ハ、半径法

三角法
3RD ANGLE PROJECTION

図面来歴
CAREER

(2003. 10. 24)
CAD化新調スル。
Rev. 1 (04. 3. 3)
Add TNV D1 (YDSTX-04025)

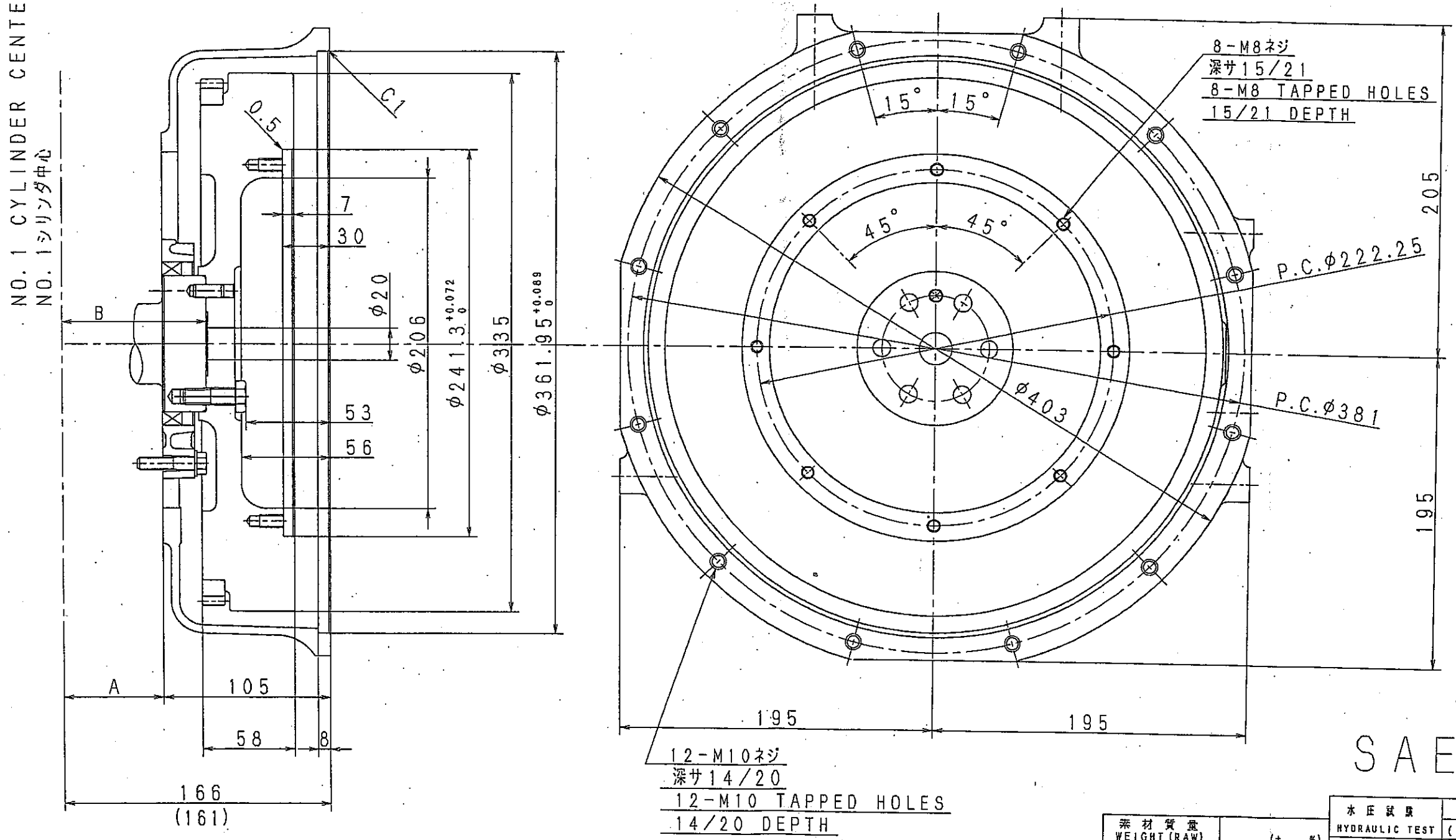

SAE#4

MODEL	DIMENSION A	DIMENSION B	FLYWHEEL HOUSING	FLYWHEEL CMP	FLYWHEEL	RING GEAR
3TNE78A, 82A	56	83.5	171420-01600	171301-21590	171301-21400	124550-21600
3TNE84, 88	61	88	↑	171340-21590	171340-21400	↑
4TNE84 (T), 88	61	88	↑	171420-21590	171420-21400	↑
3TNV82A	56	83.5	↑	171420-21590	171420-21400	↑
3TNV84 (T), 88	61	88	↑	171340-21590	171340-21400	↑
4TNV84 (T), 88	61	88	↑	171420-21590	171420-21400	↑

素材質量 WEIGHT (RAW)	(± %)	水圧試験 HYDRAULIC TEST	MPa (kg/cm²)	小形工開発部	部長 G. MANAGER / 技部長 MANAGER
完成質量 WEIGHT (精度%)	(± %)	空圧試験 PNEUMATIC TEST	MPa (kg/cm²)		高田
主幹 山崎	長 SEC. MANAGER 野村	機種 MODEL	THE DI / TNV DI	尺度 SCALE	1/2
検図 CHECKED 野村	機能担当者 SPECIALIST	個数 QTY.	1 / 1	材質 MATERIAL	別記
設計 DESIGNED 野村	製図 DRAWN 清水	年月日 DATE 2003 10. 24	名称 NAME	チョッケツブ ショウサイズ 直結部詳細図 DETAIL OF COUPLING	

YANMAR CO., LTD.
ENGINE PRODUCT OPERATIONS DIV.

コード CODE Rev. 1 Z3-71301-0031 図面サイズ A2 (C)

UNCONTROLED 2004/03/10 11:24:15