NEED ○	·	PURCHASING SPECIFICATION	·	REQUEST FOR APPROVAL	·	DELIVERY DRAWING	·	INSPECTING STANDARD	·	QC-PROCESS

GEN. TOL. —B0326	DRAFT ANG. 抜き勾配	OUTSIDE	INSIDE
		2/100	3/100
		3/100	

CAST WALL THICK 鋳肉厚	NOMINAL DIM.	5 TO	10 TO	20 TO	30 TO
	DIVISION	5 MAX	= 10	= 20	= 30	= 40
	SANDMOLD 砂型	±1.0	±1.5	±2.0	±3.0	±4.0
	SHELL シェル	±0.8	±1.0	±1.5	±2.0	±3.0

L.-CAST 機械加工	100 TO	200 TO	400 TO	800 TO	1600 TO
	100 MAX	= 200	= 400	= 800	= 1600	= 3150
	±1.5	±2.0	±3.0	±4.0	±5.0	±7.0
	±1.0	±1.5	±2.0	±3.0	±4.0	±6.0

L.-CHIP 機械加工				
0.5 TO	= 4	±0.1	250 TO	=1000	±0.8
4 TO	= 16	±0.2	1000 TO	=2000	±1.2
16 TO	= 63	±0.3	2000 TO	=4000	±2.0
63 TO	=250	±0.5			

ANG.-CHIP 機械加工		
	10 MAX	±1DEG.
10 TO	= 50	±30MIN
50 TO	=100	±20MIN
100 MIN		±10MIN

FIGURE DIMENSION

GT.CODE

○ AND ⌀:RADIAL

3RD ANGLE PROJECTION

CAREER

Rev.1(04.3.9)Correct parts
-crank pulley
-fan pulley
(YDSTX-04032)

Rev.2(04.3.26)
Change Adjuster(YDSTX-04044)

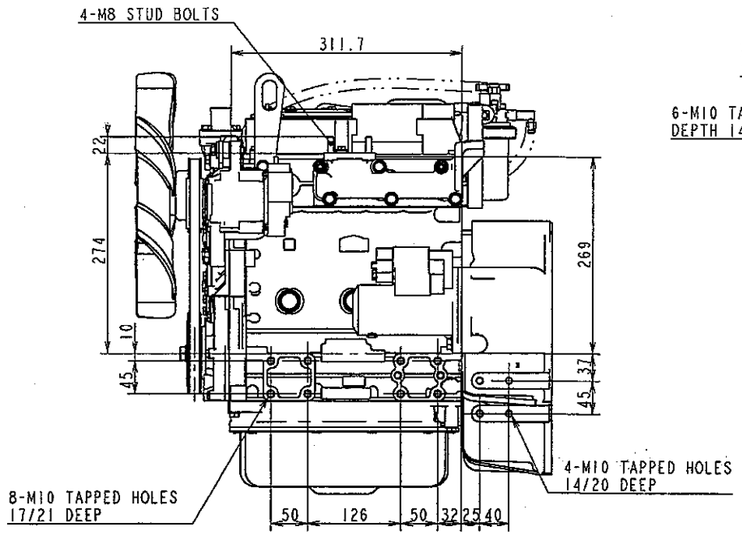

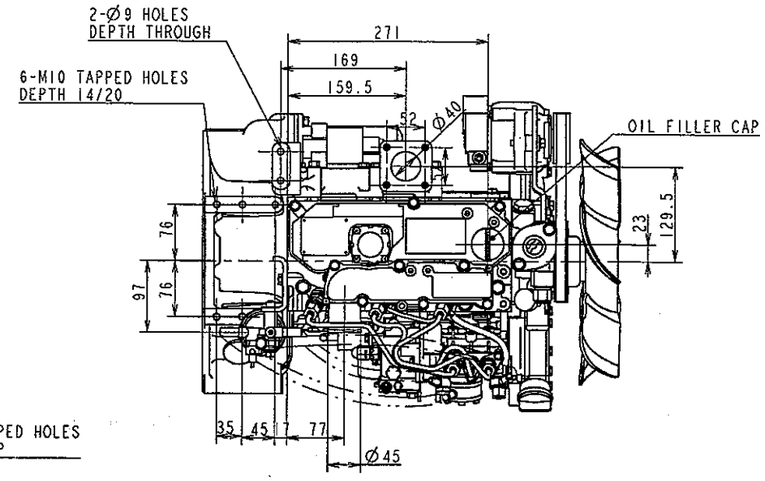

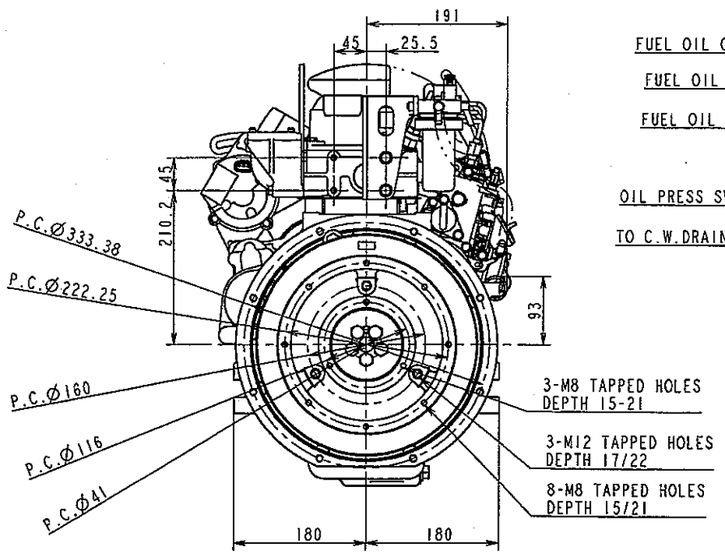

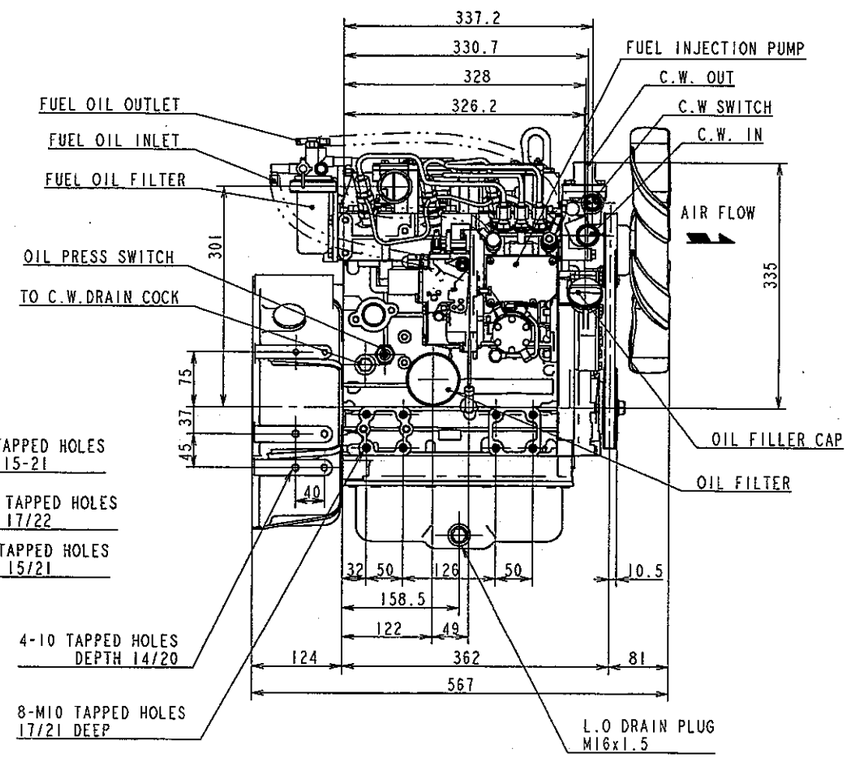

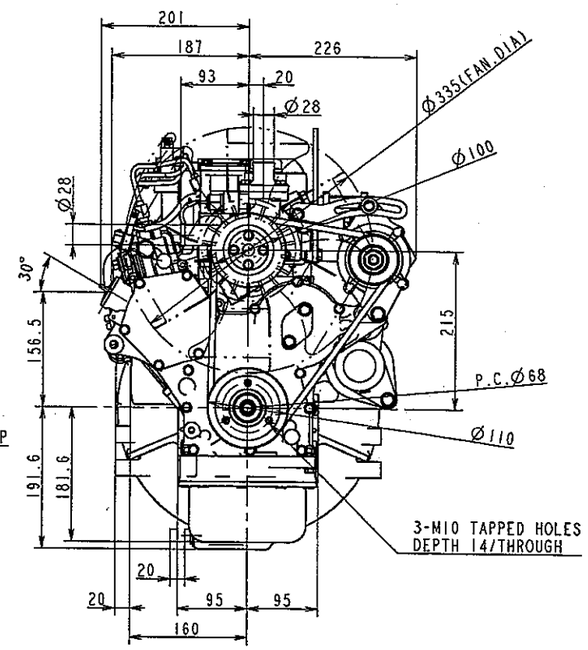

3D-CAD	
NOTICE	
GEOMETRICAL TOLERANCE	
KIND OF TOLERANCE	SYMBOL
FORM: STRAIGHTNESS TOLERANCE	—
FORM: CIRCULARITY TOLERANCE	○
FORM: PROFILE OF LINE TOLERANCE	⌒
FORM: FLATNESS TOLERANCE	⏥
FORM: CYLINDRICITY TOLERANCE	⌭
FORM: PROFILE OF SURFACE TOLERANCE	⌓
ORIENTATION: PARALLELISM TOLERANCE	//
ORIENTATION: PERPENDICULARITY TOLERANCE	⊥
ORIENTATION: ANGULARITY TOLERANCE	∠
LOCATION: POSITIONAL TOLERANCE	⌖
LOCATION: COAXIALITY OR CONCENTRICITY TOLERANCE	◎
LOCATION: SYMMETRY TOLERANCE	⌯
RUN-OUT: CIRCULAR RUN-OUT TOLERANCE	↗
RUN-OUT: TOTAL RUN-OUT TOLERANCE	⌰

WEIGHT (RAW)	kg (± ℣)		
WEIGHT (CALC.)	0.000kg (± ℣)		
	SEC.MANAGER K.Yamada	MODEL	3TNV 76-GGE
CHECKED K.Yokoi	SPECIALIST	QTY	1
DESIGNED YOKOI	DRAWN SAKAI	DATE:Y.M.D 2003.10.31	NAME

部署責任者	6.MANAGER	MANAGER
		Shichida

SCALE 1:4

MATERIAL

ミニシリンダヘッドイクイップ

OUTLINE

YANMAR

YANMAR CO.,LTD. ENGINE PRODUCT OPERATIONS DIV.

CODE Rev.1 Rev.2 B3-19746-0010

DRAW SIZE A1

要	○		購買仕様書				検査基準書		品質管理工程図		特別管理部品		量産初期安定管理部品

三角法
3RD ANGLE PROJECTION

形状寸法コード | G.T.CODE

真円度・円筒度ハ、半径法

MARK	COLOR
B	Black
W	White
R	Red
L	Blue
G	Green
Y	Yellow
Br	Brown
Lg	Light Green
Sb	Sky blue
O	Orange
P	Pink
Gr	Gray
R/W	Red/White

	B	R1	R2	ACC	C	BR
PRE-HEATING	○	○		○		
OFF	○					
ON	○			○		○
START	○		○	○	○	○

KEY SW. DIAGRAM

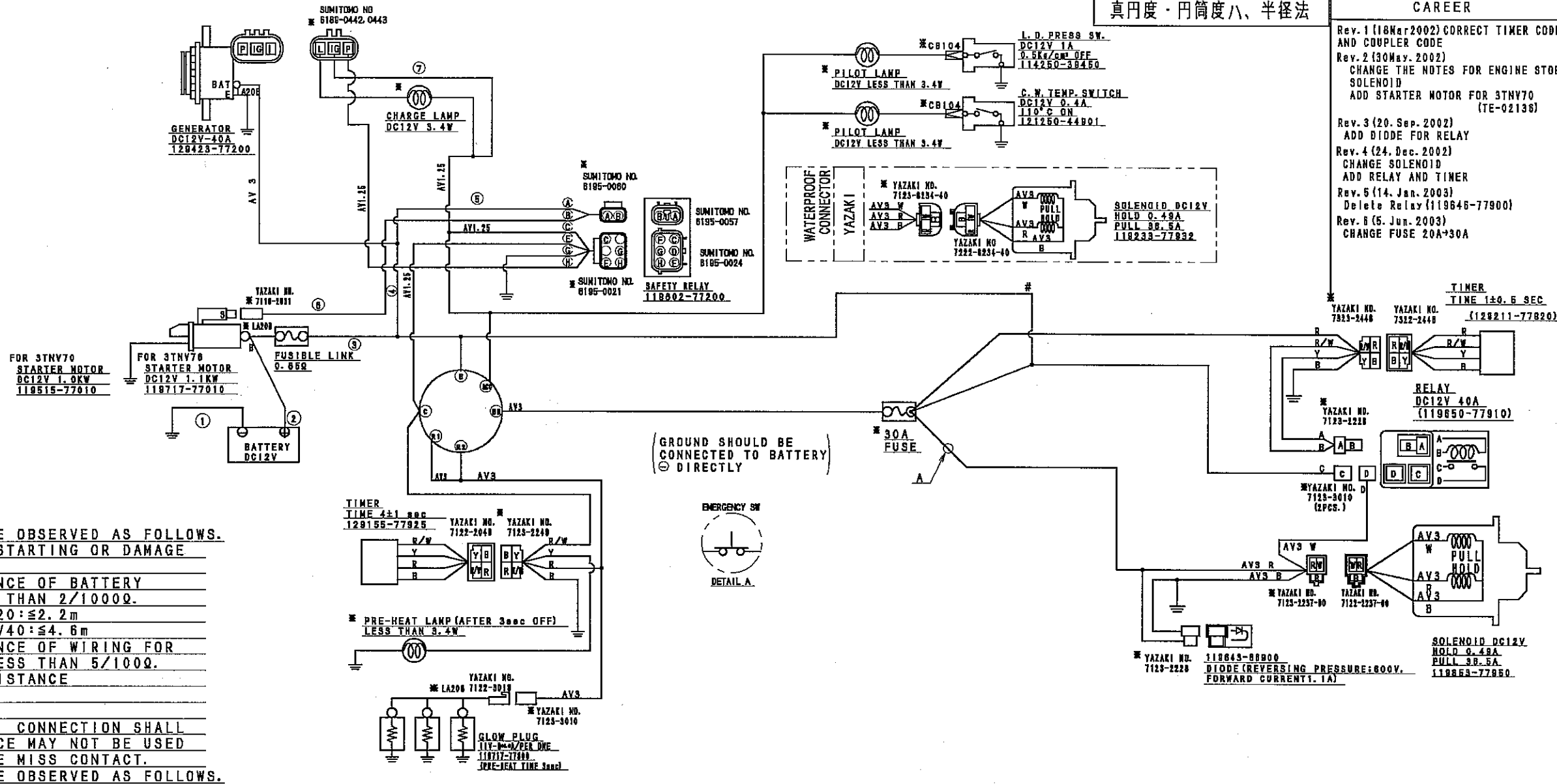

NOTES

1. WIRING OF STARTER MUST BE OBSERVED AS FOLLOWS. OTHERWISE IT CAUSES MISS STARTING OR DAMAGE OF STARTERMOTOR.
1-1. TOTAL ELECTRIC RESISTANCE OF BATTERY CABLE (①+②) SHOULD BE LESS THAN 2/1000Q.
REFERENCE: AV15:≦1.4m, AV20:≦2.2m
AV30:≦3.8m, AV40:≦4.6m
1-2. TOTAL ELECTRIC RESISTANCE OF WIRING FOR STARTER (③~⑥) SHOULD BE LESS THAN 5/100Q.
REFERENCE OF TERMINAL RESISTANCE
: 15/1000Q PER COUPLER
0Q PER SCREW SETTIG
1-3. BATTERY EARTH CABLE (①) CONNECTION SHALL BE ENSURED. PAINTED SURFACE MAY NOT BE USED (FOR EARTHING) AVOIDING THE MISS CONTACT.
2. BATTERY TREATMENT MUST BE OBSERVED AS FOLLOWS. OTHERWISE IT MAY CAUSE BURNING OF ELECTRIC EQUIPMENTS OR COMPONENTS. ALTERNATOR (DIODES) BURNING CAUSED BY BATTERY CABLE CONNECTION REVERSELY IS NOT WARRANTED.
2-1. BATTERY SHOULD BE FIXED BY FITTING. (NOT TO MOVE)
2-2. BATTERY CABLE LENGTH SHOULD BE ADJUSTED PROPERLY AND CLAMPED NOT TO BE CONNECTED REVERSELY.
2-3. NOT LOOSE THE BATTERY CABLE TERMINAL, NOR TURN THE BATTERY SWITCH OFF DURING THE ENGINE RUNNING.
3. ONLY THE SPECIFIED LOAD SHOULD BE APPLIED ON THE ALTERNATOR 'L' AND 'P' LINE.
IT IS NOT ALLOWED TO CONNECT ANY LOAD UNSPECIFIED WITHOUT YANMAR APPROVAL.
4. CHECK ANY SURGE CURRENT OR VOLTAGE OCCURED UNDER NORMAL OPERATIONS AND EXPECTIVE ERRONEOUS OPERATIONS, AND CONFIRM THE CIRCUIT NO SURGE OCCURS.
ESPECIALLY PROVIDE THE FLYWHEEL DIODE FOR 'C-LOAD' AND DIODE FOR 'L-LOAD'.

REMARKS

1. ※ MARKED PARTS ARE NOT PROVIDED BY YANMAR.

NOTES FOR ENGINE STOP SOLENOID

1. PERMISSIBLE RESISTANCE OF SOLENOID CIRCUIT SHOULD BE LESS THAN 0.07Q TO GUARANTEE PERMISSIBLE LOWEST VOLTAGE 9V TO WORK SOLENOID (PULL COIL).
(TERMINAL RESISTANCE :15/1000Q PER COUPLER.
0Q PER SCREW SETTING.
COUPLER RESISTANCE OF SOLENOID DOESN'T NEED TO BE COUNTED)
REFERENCE :AV2 (0.0088Q/m) :≦8.0m···WITHOUT TERMINAL RESISTANCE
AV3 (0.0056Q/m) :≦12.5m···SAME AS ABOVE
WHEN YOU EXCEED PERMISSIBLE RESISTANCE, ADOPT THE CIRCUIT IMPRESSED FROM THE POWER SUPPLY TO THE SOLENOID DIRECTLY USING A RELAY ···REFER TO #
2. HIGH TEMPERATURE PARTS, SUCH AS AN EXHAUST PIPE, SHOULD NOT APPROACH FOR THE PULL POWER FALL OF SOLENOID, AND HEATING PREVENTION OF INNER COIL TEMPERATURE. (PERMISSIBLE AMBIENT TEMPERATURE:-30~100℃)
3. INSTALL FUSE TO PROTECT THE HARNESS AGAINST TROUBLES SUCH AS SHORT CIRCUIT OR CONTINUOUS DRIVE OF PULL-COIL.
4. THE POWER SUPPLY OF SOLENOID MAY NOT BE COMMON WITH THE LINE OF ALTERNATOR INITIAL EXCITATOR AS SHOWN IN THIS DRAWING. (OTHERWISE, SOLENOID MAY LOOSE STOP FUNCTION DUE TO THE POWER SUPPLY FROM ALTERNATOR 'L' TERMINAL.)
5. IN CASE OF WATERPROOF CONNECT OR APPLICATION, CONNECTOR SHOULD BE FIXED BY FITTING TO PREVENT LEAD WIRE BREAK.
6. IN CASE OF EMARGENCY STOP OF MACHINE FOR SAFETY WILL BE APPLIED, SWITCH LOCATION SHOULD BE SHOWN AS A.
7. IN CASE OF THE SOLENOID CIRCUIT RESISTANCE WOULD BE LIMIT.
WIRING IS APPLICABLE.

図面来歴
CAREER

Rev. 1 (18Mar2002) CORRECT TIMER CODE AND COUPLER CODE
Rev. 2 (30May. 2002)
CHANGE THE NOTES FOR ENGINE STOP SOLENOID
ADD STARTER MOTOR FOR 3TNV70 (TE-02136)
Rev. 3 (20. Sep. 2002)
ADD DIODE FOR RELAY
Rev. 4 (24. Dec. 2002)
CHANGE SOLENOID
ADD RELAY AND TIMER
Rev. 5 (14. Jan. 2003)
Delete Relay (119646-77900)
Rev. 6 (5. Jun. 2003)
CHANGE FUSE 20A→30A

素材質量 WEIGHT (RAW)	(± %)	水圧試験 HYDRAULIC TEST	MPa (kg/cm²)
完成質量 WEIGHT (補度%)	(± %)	空圧試験 PNEUMATIC TEST	MPa (kg/cm²)
主査	長 SEC. MANAGER Y. Yamada	機種 MODEL	3TNV70 / 3TNV76
検図 CHECKED H. Yokoi	機能担当者 SPECIALIST	個数 QTY.	
設計 DESIGNED H. Yokoi	製図 DRAWN S. Shimizu	年月日 DATE	2002 1. 29

小形工開発部 | 部長 G. MANAGER Y. Nishida | 技部長 MANAGER

尺度 SCALE: SCALE OUT
材質 MATERIAL

名称 NAME: ケッセンス WIRING DIAGRAM
WIRING DIGLAM

YANMAR CO., LTD.
ENGINE PRODUCT OPERATIONS DIV.

Rev. 2 | Rev. 3 | Rev. 4 | Rev. 5 | Rev. 6
コードCODE: E3-19717-0080
図面サイズ: A2 (C)

変更マーク	
補度ノ種類ト記号	
種類	記号
真直度	—
真円度	○
線形	⌒
平面度	▱
円筒度	⌭
面形	⌓
平行度	//
直角度	⊥
傾斜度	∠
位置度	⊕
同軸度	◎
対称度	⌯
円周振れ	↗
全振れ公差	⌰

NEED	○	PURCHASING SPECIFICATION	REQUEST FOR APPROVAL	DELIVERY DRAWING	INSPECTING STANDARD	QC-PROCESS

FILE NAME: Z3-19746-0010.DRW

3RD ANGLE PROJECTION

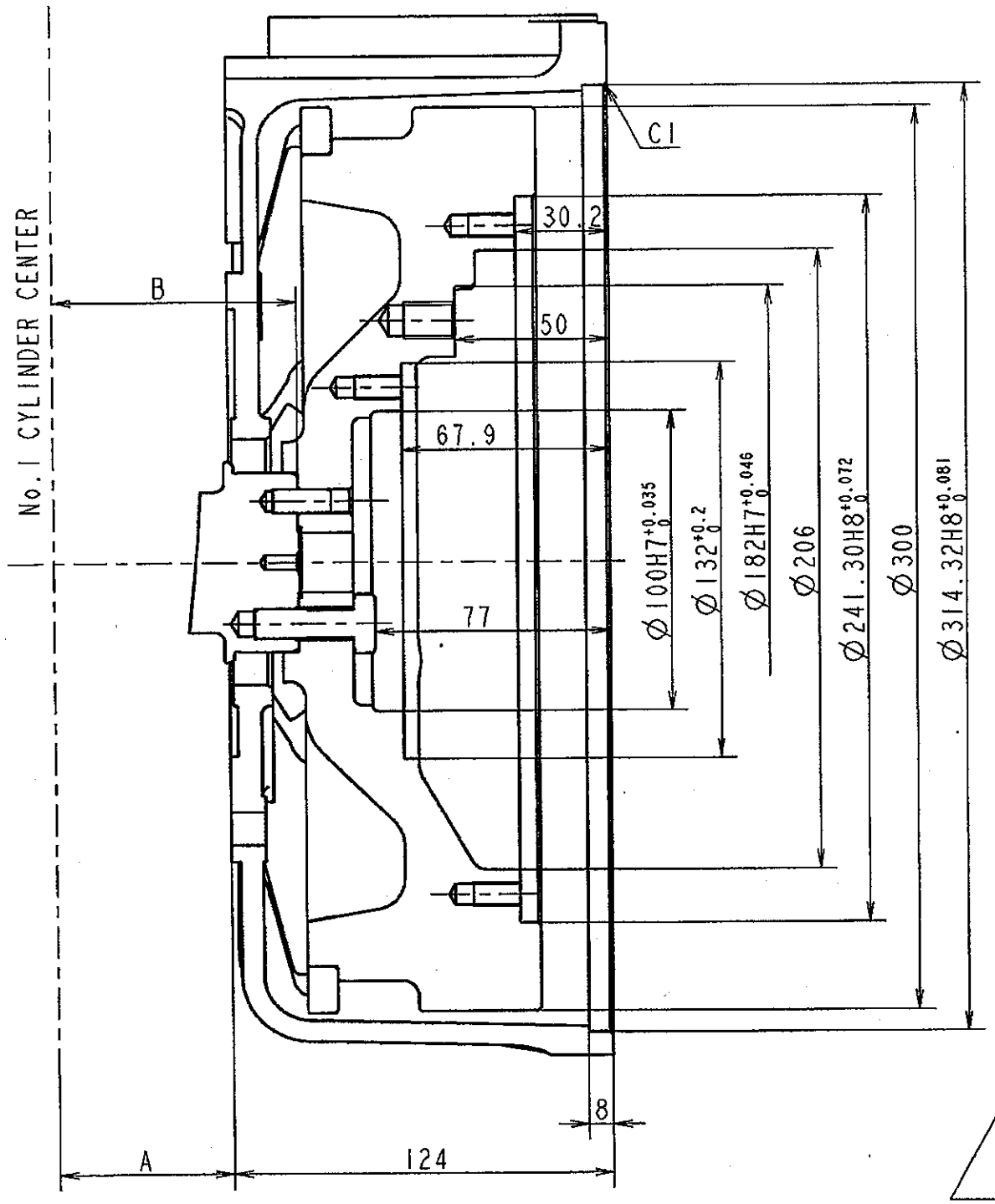

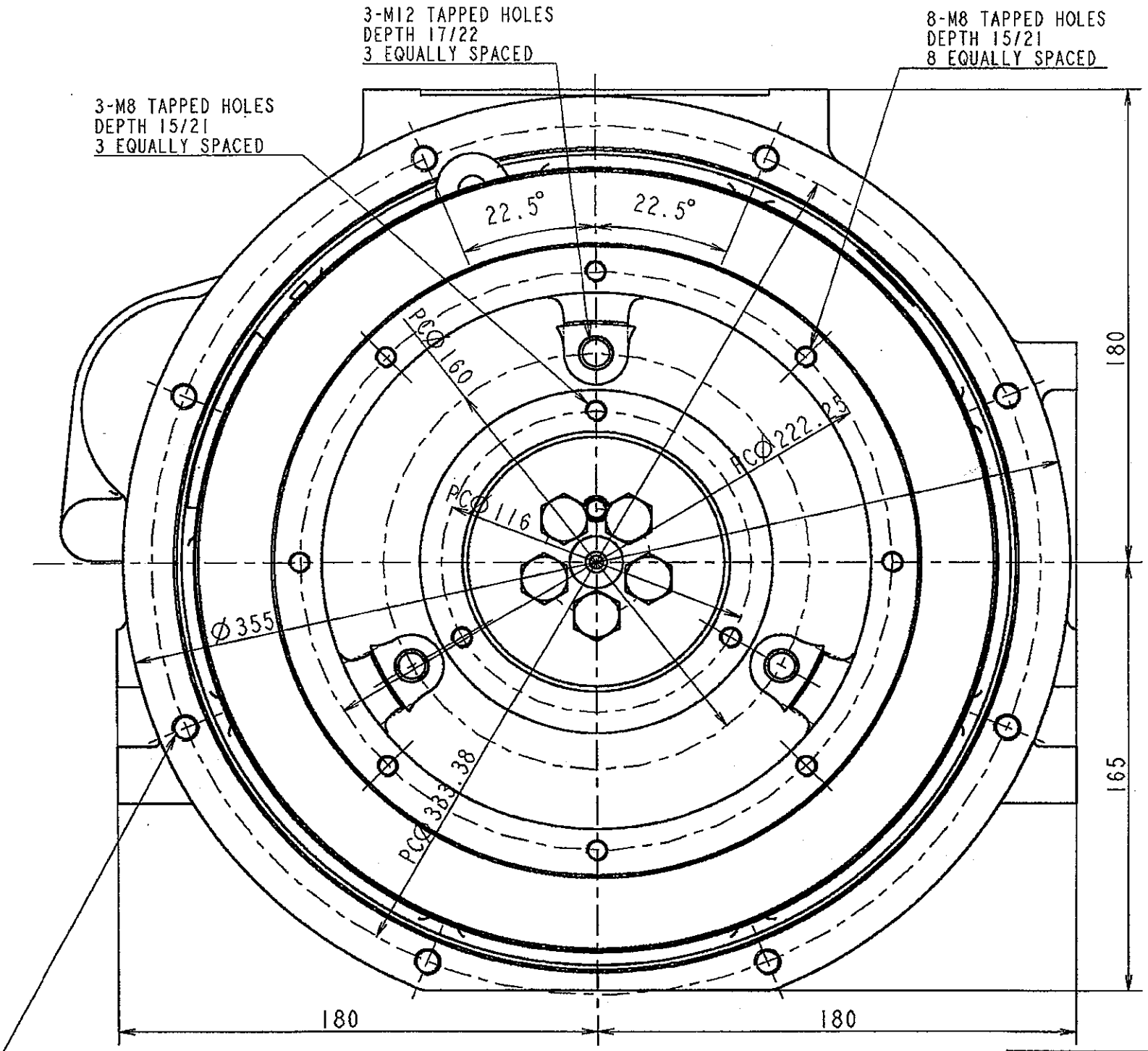

3D-CAD

NOTICE

GEOMETRICAL TOLERANCE	
KIND OF TOLERANCE	SYMBOL
FORM	STRAIGHTNESS TOLERANCE —
	CIRCULARITY TOLERANCE ○
	PROFILE OF LINE TOLERANCE ⌒
	FLATNESS TOLERANCE ▱
	CYLINDRICITY TOLERANCE ⌭
	PROFILE TOLERANCE OF SURFACE ⌓
ORIENTATION	PARALLELISM TOLERANCE //
	PERPENDICULARITY TOLERANCE ⊥
	ANGULARITY TOLERANCE ∠
LOCATION	POSITIONAL TOLERANCE ⌖
	CONCENTRICITY OR COAXIALITY TOLERANCE ◎
	SYMMETRY TOLERANCE ⌯
RUN-OUT	CIRCULAR RUN-OUT TOLERANCE ↗
	TOTAL RUN-OUT TOLERANCE ⌰

MODEL	DIMENSION A	DIMENSION B	FLYWHEEL HOUSING	FLYWHEEL CMP	FLYWHEEL
3TNV70	54	76	119717-01610	119746-21570	119746-21410
3TNV76	57	79	↑	↑	↑

WEIGHT (RAW)	kg (± %)		
WEIGHT (CALC.)	0.000kg (± %)		
	SEC. MANAGER 山田	CAREER	
CHECKED	SPECIALIST		
DESIGNED 横井	DRAWN 中川		
DATE: Y.M.D 2003.11.27		YANMAR CO., LTD ENEGINE PRODUCT OPERATIONS DIV.	

小形工機部	MANAGER	SEN. MANAGER 山田

	3TNV 70	3TNV 76					SCALE	1:2
MODEL							MATERIAL	
QTY	1	1						
NAME	COUPLING SAE #5							

YANMAR

CODE Z3-19746-0010

DRAW SIZE A3